ZIBO CREATIVE
ZIBO CREATIVE INTERNATIONAL TRADE CO.LTD.

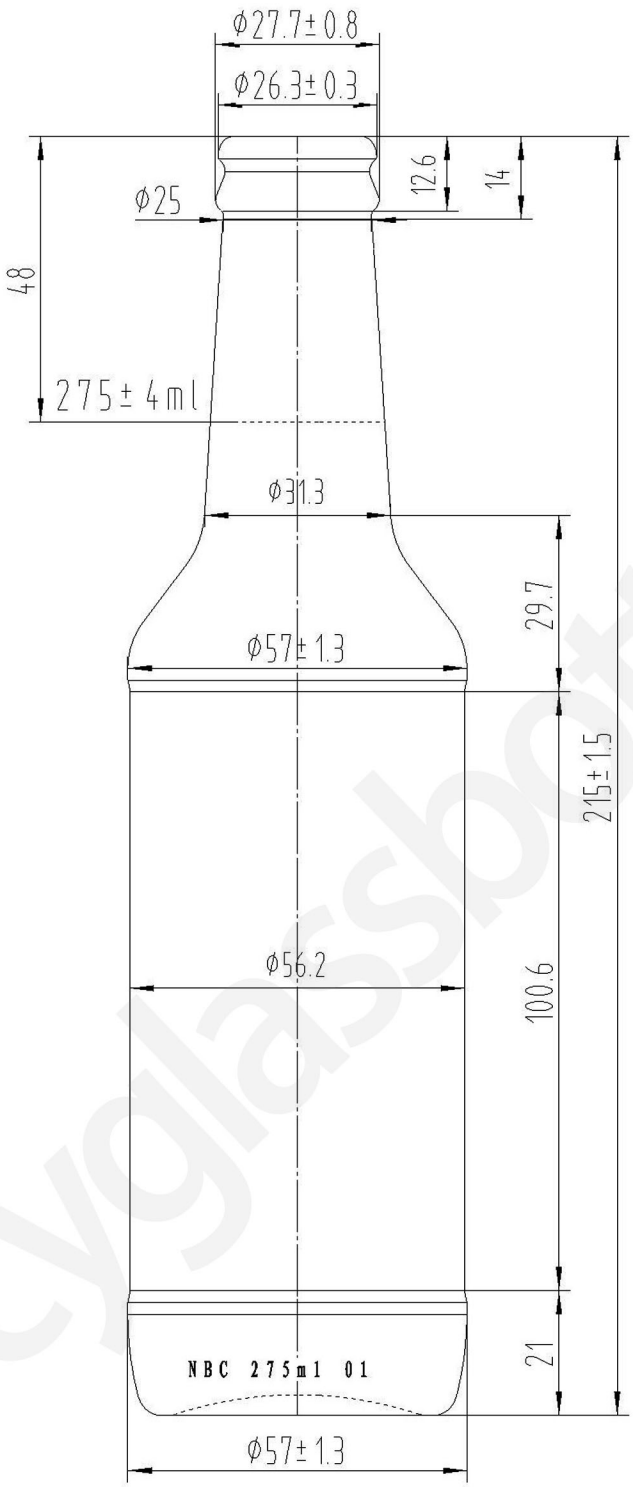

Name:	CY823
Style:	Beverage
Capacity:	275ml
Finish:	Standard Crown
Color:	Flint
Height:	215mm
Diameter:	57mm
Weight:	235g

cyglassbottle.com

cyglassbottle.com