ZIBO CREATIVE
ZIBO CREATIVE INTERNATIONAL TRADE CO.LTD.

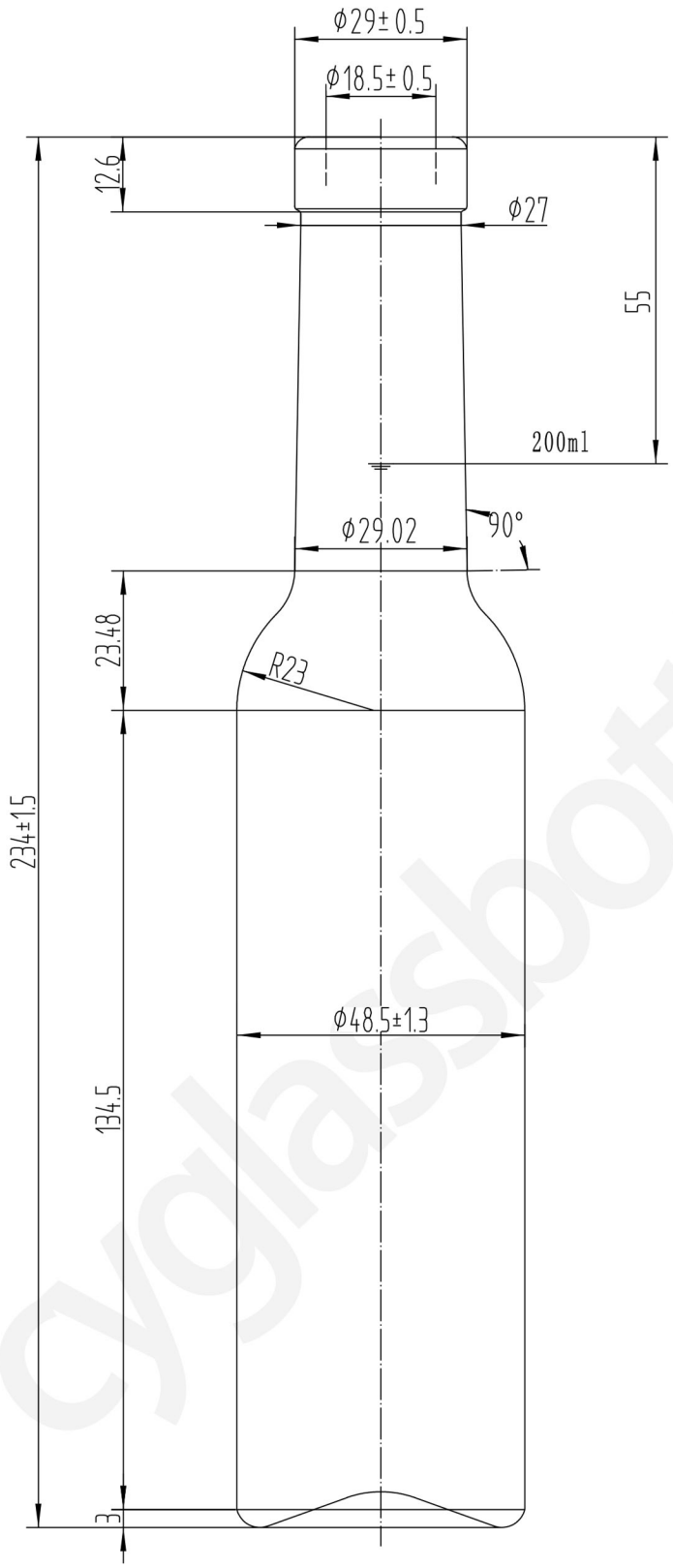

Name:	1107C
Style:	Bordeaux
Capacity:	200ml
Finish:	Standard cork
Color:	Antique green Flint
Height:	234mm
Diameter:	49mm
Weight:	290g

cyglassbottle.com

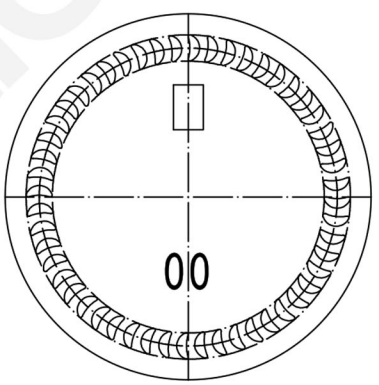

cyglassbottle.com